NO. RBT116/30RRX

SUPSDS.

QTY	PRODUCT	NEXT ASSY. DWG.	NO.	DESCRIPTION OF CHANGE	SCO	DATE	BY
				NEW ISSUE		08/08/15	DSE

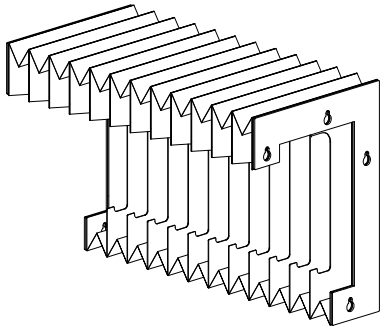

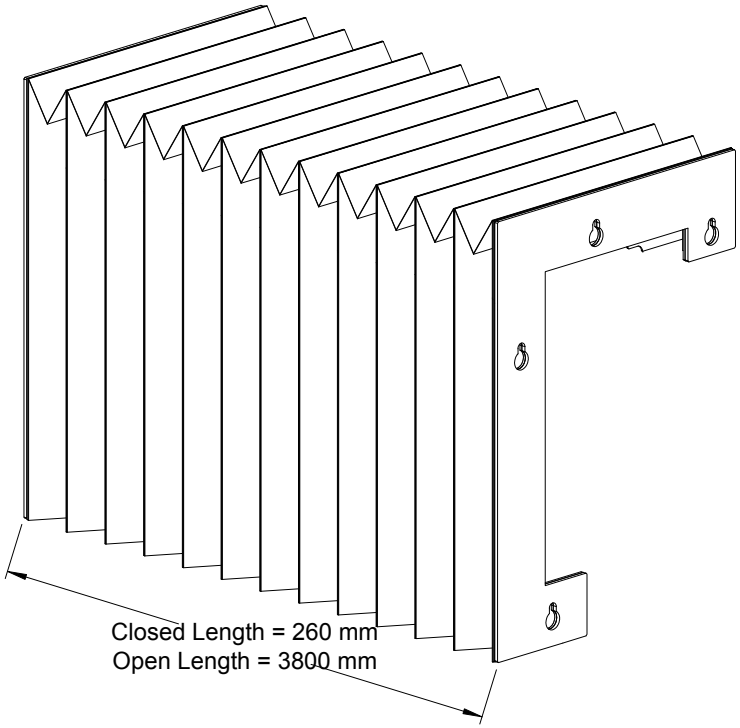

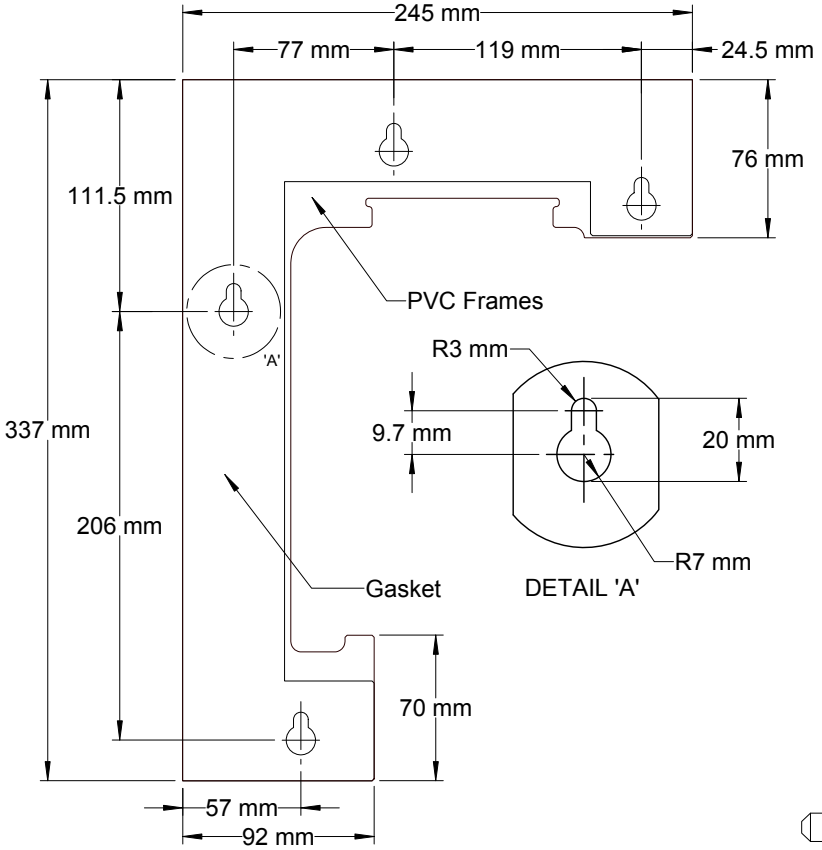

Note: Dimensions are for identification purposes only and not for inspection.

TOLERANCES UNLESS OTHERWISE SPECIFIED

FRACTIONS ±1/64 DECIMALS: .X ±.1 .XXX ±.005

ANGLES ±1/2° .XX ±.01 .XXXX ±.001

DO NOT SCALE DRAWING

DRAWN	DSE	SCALE	NTS
ENG. MGR.		ENG. CHKD.	
ENG. MGR.		PRODN. APPD.	
MAT'L			
MAT'L. SPEC. NO.			
FINISH		PROD.	

THIS DOCUMENT IS THE PROPERTY OF RICHARDSON ELECTRONICS, LTD. AND SHALL NOT BE COPIED, REPRODUCED, USED IN THE MANUFACTURE OR SALE OF APPARATUS OR DISCLOSED TO OTHERS WITHOUT PERMISSION.

Richardson Electronics, Ltd.

RIGHT X RAIL BELLOWS REPLACES TRUMPF P/N 1458866, 1865268

NO. RBT116/30RRX REV. — 0